INTERNATIONAL IRI

Insel Rectifiers (India) Pvt. Ltd.
151, 152 Udyog Kendra Extn II, Ecotech III
Greater Noida: 201306, U.P., India
1800 3070 9989 insel@rectifierindia.com
www.rectifierindia.com

POWER DIODE

40NB/40RB

DO5

FEATURES

- **Available in Normal & Reverse Polarity**
- **All Diffused Series**
- **Industrial Grade**
- **Available in Avalanche Characteristic**

TYPICAL APPLICATIONS

- **Power supplies**
- **Machine tool controls**
- **Battery chargers**
- **Welders**

INTERNATIONAL IRI

POWER DIODE
40NB/RB

TECHNICAL DATA

DEVICE TYPE	V_{RRM} (V)	V_{RSM} (V)
40NB/RB40	400	500
40NB/RB120	1200	1300
40NB/RB160	1600	1700

SYMBOL	CONDITIONS	VALUES
$I_{F(AV)}$	Maximum average forward Current T_c = 140^{0}C	40A
V_{FM}	Maximum peak forward Voltage drop @ Rated $I_{F\,(Peak)}$	1.35 V
I_{FSM}	Maximum peak one cycle (non-rep.) surge current 10 msec	500 A
I^2t	Max. I^2t rating (non-rep.) for 10 msec	1250 A^2Sec
I_{RRM}	Peak reverse current at T_{vj} = 175^{0}C	10 mA
V_0 R_0	Tvj=max Tvj=max	0.85 V 6.00 mΩ
$R_{th(j-c)}$ $R_{th(c-h)}$ Tvj Tstg	Maximum thermal resistance (Junction to case) Maximum thermal resistance (Case to heat sink) Junction temperature Storage temperature	1.0 °C/W 0.30 °C/W 150 °C 160 °C
Mounting torque		4 Nm
Weight	Approx.	30 gms
Package Outline		B

INTERNATIONAL IRI

POWER DIODE
40NB/RB

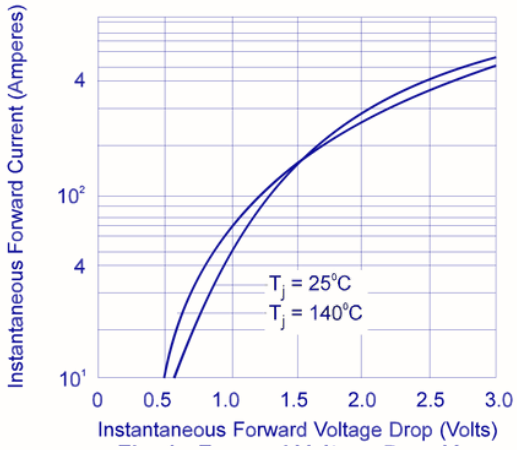

FIG. **1** **forward voltage drop vs. forward current**

FIG. **2** **average forward current vs. case temperature**

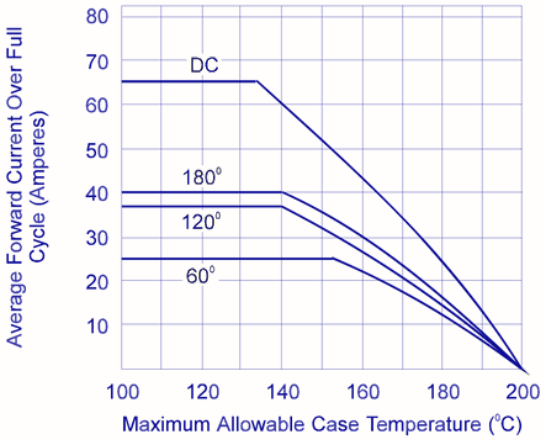

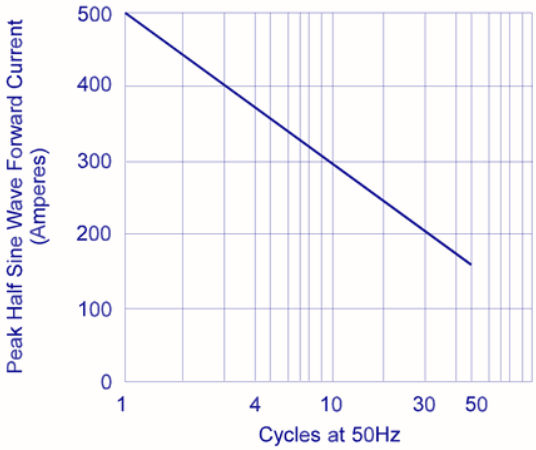

FIG. **3** **maximum non recurrent surge current**

INTERNATIONAL IRI

POWER DIODE
40NB/RB

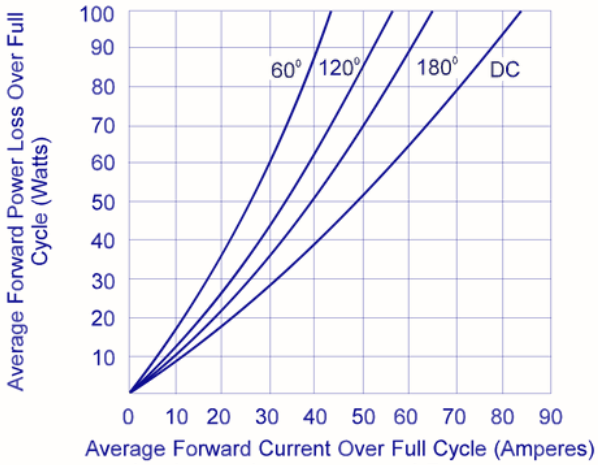

FIG. **4** **maximum forward power loss vs. low level forward current**

FIG. **5** **transient thermal impedance**

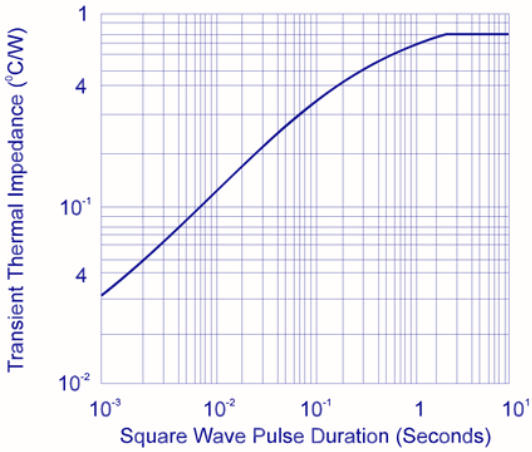

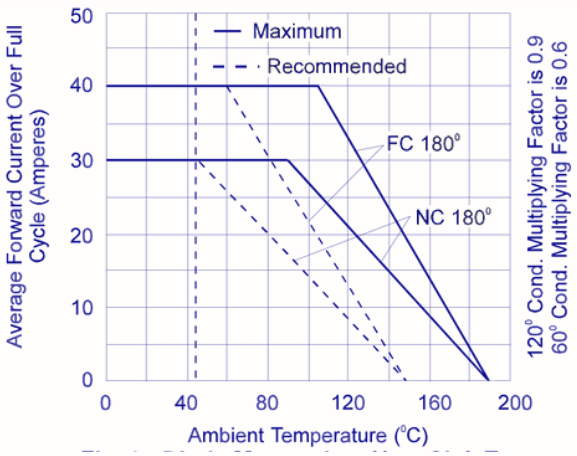

FIG. **6** **diode mounted on heat sink**
type K3 with θ HA 2.5°C / W, FC 0.65°C/W

INTERNATIONAL IRI

POWER DIODE
40NB/RB

PACKAGE OUTLINE

WOL

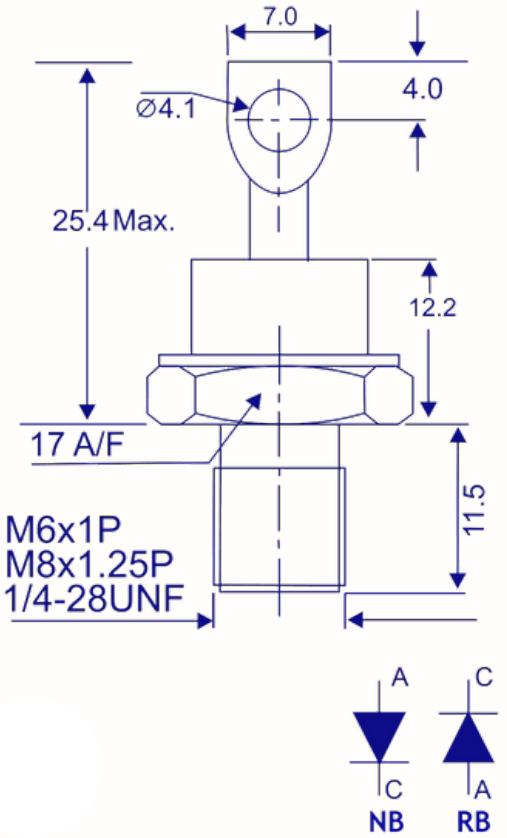

WL

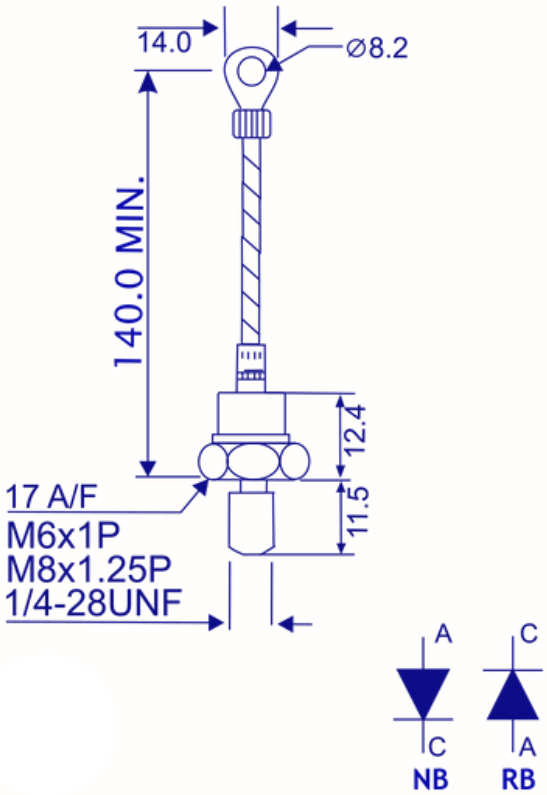

all dimensions in mm